

BATH-D

Item code	**86.D002.1313.01**
Product type	**Indoor**
Category	**Downlights**
Family	**BATH-D**
Pictograms	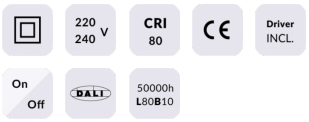

Product	
Real power (W)	**9**
Real luminous flux (Lm)	**720**
Luminous efficiency (Lm/W)	**80**
Beam angle (º)	**20**
Life time (h)	**50000 h L80B10**
IP	**65**
Control gear	**DALI**
Colour temperature (K)	**3000**
Colour consistency (SDCM)	**SDCM3**
CRI	**80**

Scheme

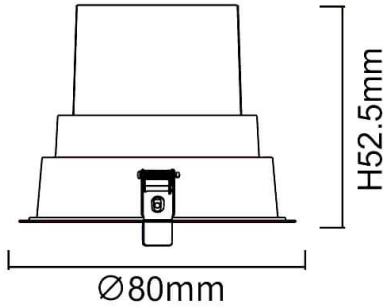

Photometry

